Work Order ID 51397

August 21, 2009 8:57:21 AM

Item ID: D3764-1
Revision ID: B
Item Name: Back Leg Fitting

Accept

Setup Start
Stop

Start Date: 23/08/2009 **Start Qty:** 8.00
Required Date: 29/08/2009 **Req'd Qty:** 8.00
Reference: 09.08.21

Cust Item ID:
Customer:

Run Start
Stop

Approvals: **Process Plan:** _____ **Date:** _____ **Tooling:** _____ **Date:** _____
QC: _____ **Date:** _____ **SPC (Y/N):** _____ **Date:** _____

Draw Nbr	Revision Nbr
D3764	Rev B

Sequence ID/ Work Center ID	Operation Description	Set Up/ Run Hours	Draw Number	Draw Rev.	Plan Code	Accept Qty	Reject Qty	Reject Number	Insp. Stamp
100 Bandsaw Jeaspa Bandsaw	BAND SAW **Memo** Cut blank 2.95" long	0.00 0.00	SP 09/08/23			8			
110 HAAS 1 HAAS CNC vertical machine #1	HAAS CNC VERTICAL MACHINING #1 **Memo** 1- Mill as per Folio FA741 Rev: AA & Dwg D3764Rev: B ☐2-Deburr per dwg D3764	0.00 0.00	SP 09/08/24			8	1		
120 QC Quality Control	QC2- Inspect parts off machine FAI/FAIB **Memo**	0.00 0.00	SP 09/08/24			8	1		

Dart Aerospace Ltd

W/O:		WORK ORDER CHANGES					
DATE	STEP	PROCEDURE CHANGE	By	Date	Qty	Approval Chief Eng / Prod Mgr	Approval QC Inspector

Part No: D3764-1 PAR #: N/A Fault Category: Machine NCR: (Yes) No DQA: [illegible] Date: 09.08.28

Resolution: SCRAP Disposition: SCRAP QA: N/C Closed: [illegible] Date: 09.08.28

NCR: 51397		WORK ORDER NON-CONFORMANCE (NCR)						
DATE	STEP	Description of NC Section A	Corrective Action Section B: Initial Chief Eng	Action Description Chief Eng	Sign & Date	Verification Section C	Approval Chief Eng	Approval QC Inspector
07/08/24	110	- First part Have Mark Inside the Hole of 1.010. - Dimension of 2.710 was too short at 2.678.	CP 09.08.25 pv QSI 042	SCRAP Qty 1. Replace M 110167	SS 09/08/24	H.A 09/08/25	CP 09.08.25 pv QSI 042	[illegible] 09.08.25
	R.C	- Program error feed too fast. - operator error origin was Taken Badly.	CP 09.08.25	[illegible] 08.08.24 Fix Progr.	SS 09/08/24 [illegible] 08-08-24	H.A 09/08/25	CP 09.08.25	~~QSI 042~~ 09.08.25

NOTE: Date & initial all entries

H:\fFORMS\Quality Assurance\approved QA\NCRWO RevE

Work Order ID 51397

August 21, 2009 8:57:21 AM

Item ID: D3764-1
Revision ID: B
Item Name: Back Leg Fitting

Accept

Setup Start
Stop

Start Date: 23/08/2009 **Start Qty:** 8.00
Required Date: 29/08/2009 **Req'd Qty:** 8.00
Reference:

Cust Item ID:
Customer:

Run Start
Stop

Approvals: **Process Plan:** _____ **Date:** _____ **Tooling:** _____ **Date:** _____
QC: _____ **Date:** _____ **SPC (Y/N):** _____ **Date:** _____

Sequence ID/ Work Center ID	Operation Description	Set Up/ Run Hours	Draw Number	Draw Rev.	Plan Code	Accept Qty	Reject Qty	Reject Number	Insp. Stamp
130	QC8- Inspect parts - second check	0.00				8	1		
QC	Memo	0.00	G.A 09/08/25						
Quality Control									
140	Chemical Conversion Coat per QSI005 4.1	0.00	09/08/25			8	0		
HandFinish	Memo	0.00							
Hand Finishing									
150	QC3- Inspect Part Finish	0.00	BR 09-08-25			8			
QC	Memo	0.00							
Quality Control									

Work Order ID 51397

August 21, 2009 8:57:21 AM

Item ID: D3764-1
Revision ID: B
Item Name: Back Leg Fitting

Accept

Setup Start
Stop

Start Date: 23/08/2009 **Start Qty:** 8.00
Required Date: 29/08/2009 **Req'd Qty:** 8.00
Reference:

Cust Item ID:
Customer:

Run Start
Stop

Approvals: **Process Plan:** _____ **Date:** _____ **Tooling:** _____ **Date:** _____
QC: _____ **Date:** _____ **SPC (Y/N):** _____ **Date:** _____

Sequence ID/ Work Center ID	Operation Description	Set Up/ Run Hours	Draw Number	Draw Rev.	Plan Code	Accept Qty	Reject Qty	Reject Number	Insp. Stamp
160	Identify as per dwg & Stock Location: 25/A	0.00							
Packaging	Memo	0.00					04/8/26		(8)
Packaging									
170	QC21- Final Inspection - Work Order Release	0.00					09/08/26		
QC	Memo	0.00							
Quality Control									

BP 09-8-26

Picklist Print

August 21, 2009 8:57:20 AM

Work Order ID: 51397

Parent Item: D3764-1RevB

Parent Item Name: Back Leg Fitting

Comments:

Start Date: 23/08/2009 **Required Date:** 29/08/2009

Start Qty: 8.00 **Required Qty:** 8.00

Component Item ID/ Item Name	Replacement Item ID	Mfg/ Purch	Bin Item	Primary Location	Last Location	Route Seq ID	Unit of Measure	Qty on Hand	Remaining Qty To Pick	Qty Issued	Date Issued	Status
M6061T6B1.500X02.00 0		Purchased	No			100	f	31.0000	2.1053			
6061-T6 Bar 1.50 x 2.00												

SP 09/08/26

Warehouse Location	Loc Qty	Loc Code
Main Warehouse		
MAT	31	
108877	11	
110167	20	2.1053

DART AEROSPACE LTD	Work Order:	51394
Description: Back Leg Fitting	Part Number:	D3764-1
Inspection Dwg: D3764 Rev: B		Page 1 of 1

FIRST ARTICLE INSPECTION CHECKLIST

[X] First Article [ ] Prototype

Drawing Dimension	Tolerance	Actual Dimension	Accept	Reject	Method of Inspection	Comments
0.600	+/-0.010	.602	✓			
Ø1.010	+0.010/-0.000	1.015	✓			
Ø1.265	+0.010/-0.000	1.268	✓			
10°	+/-0.5°	10°	✓			
1.20	+/-0.030	1.202	✓			
Ø0.323	+0.006/-0.001	.323	✓			
Ø0.201	+0.005/-0.001	.202	✓			
1.45	+/-0.030	1.447	✓			
0.725	+/-0.010	.725				
0.605	+/-0.010	.607	✓			
2.71	+/-0.030	2.706	✓			
N/A ~~1.370~~	~~+/-0.010~~				09.08.24	

Measured by:		Audited by:		Prototype Approval:	N/A
Date:	09/08/24	Date:	09/08/25	Date:	N/A

Rev	Date	Change	Revised by,	Approved
A	08.07.24	New Issue	KJ/DD	

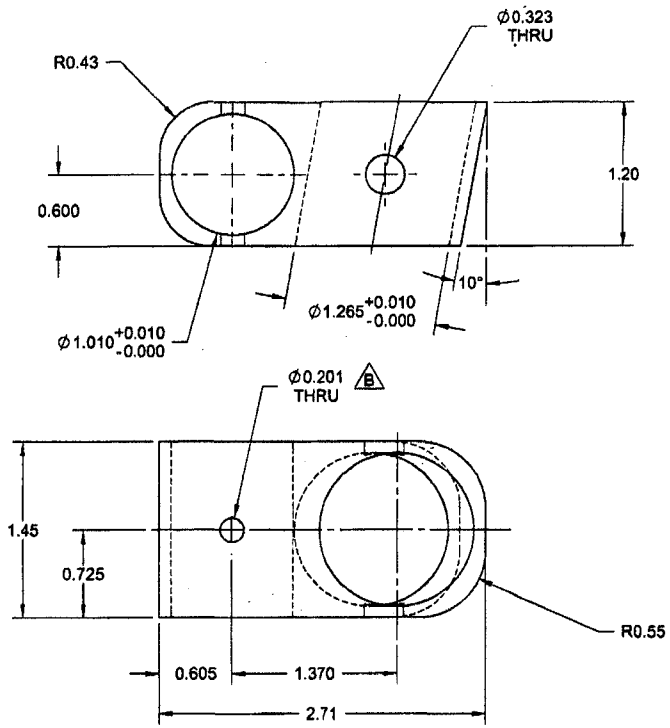

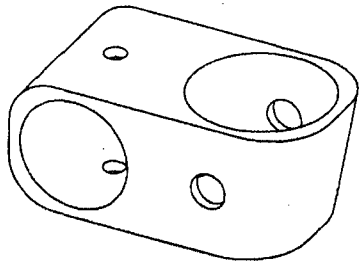

D3764-1 BACK LEG FITTING

REV.	DESCRIPTION	BY	DATE
B	CHANGE HOLE SIZE TO 0.201	HS	08.06.10
A	NEW ISSUE	HS	08.06.04

DESIGN	HS	**DART AEROSPACE LTD** HAWKESBURY, ONTARIO, CANADA
DRAWN	HS	
CHECKED		DRAWING NO. D3764 — REV. B — SHEET 1 OF 1
MFG. APPR.		
APPROVED		TITLE: BACK LEG FITTING — SCALE: NTS
DE APPR.		
DATE	08.06.10	

COPYRIGHT © 2008 BY DART AEROSPACE LTD
THIS DOCUMENT IS PRIVATE AND CONFIDENTIAL AND IS SUPPLIED ON THE EXPRESS CONDITION THAT IT IS NOT TO BE USED FOR ANY PURPOSE OR COPIED OR COMMUNICATED TO ANY OTHER PERSON WITHOUT WRITTEN PERMISSION FROM DART AEROSPACE LTD.

NOTES:
1) MATERIAL: 6061-T6 (OR 6061-T651/T6510/T6511/T62) ALUMINUM BAR PER AMS-QQ-A-225/8 (OR AMS 4117/4128/4115/4116) PER AMS-QQ-A-200/8 (OR AMS 4160) (REF. DART SPEC. M6061T6B)
2) FINISH: CHEMICAL CONVERSION COAT PER DART QSI 005 4.1
3) TOLERANCES: PER DART QSI 018 UNLESS OTHERWISE NOTED
4) UNITS: INCHES UNLESS OTHERWISE NOTED
5) BREAK SHARP EDGES: 0.005 TO 0.010 MAX
6) IDENTIFICATION: N/A
7) WEIGHT: 0.13 lbs